ß

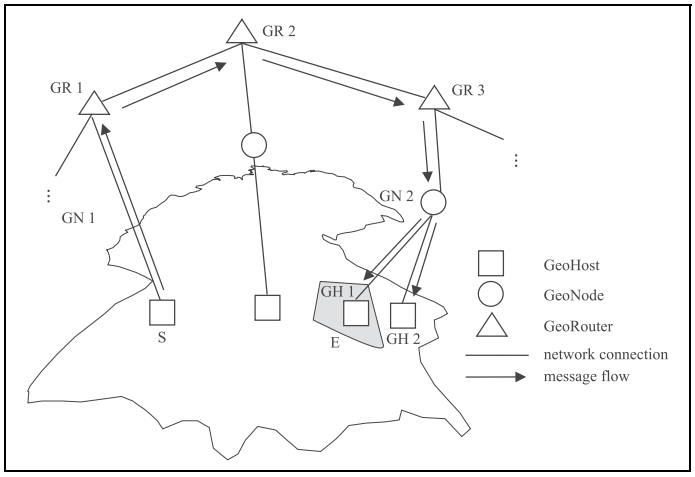
GR 2
GR 1
GR 3
GN 1
GN 2
GH 1
GH 2
S
E
GeoHost
GeoNode
GeoRouter
network connection
message flow

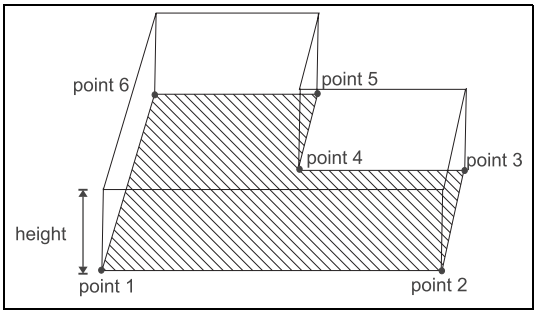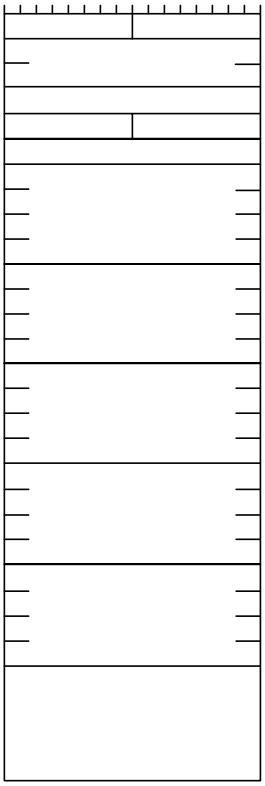
point 6
point 5
point 4
point 3
height
point 1
point 2